**IP Kontakt**
Pl. Zwycięstwa 2E
90-312 Łódź
Poland
tel. +48 42 676 75 25
+48 42 674 22 74
+48 42 674 22 88
e-mail: *ipkontakt@ipkontakt.pl*

# FP-319 - LDPE / Soft PVC Feet

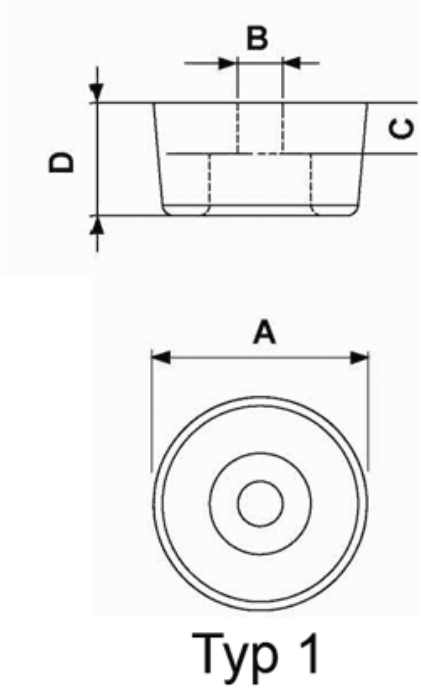


Typ 1

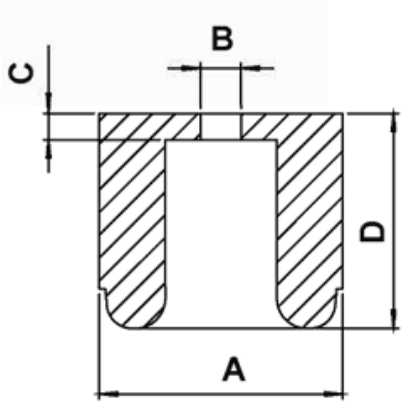


Typ 2



Details:

- **Material: Soft PVC or LDPE**
- **Color: black**

| Symbol | Type | Ext. diameter A | B | C | Height D | Material | Color | Standard pack |
|---|---|---|---|---|---|---|---|---|
| | | [mm] | [mm] | [mm] | [mm] | | | [szt./pcs] |
| 1020EA01 | 2 | 24 | 5 | 6 | 21 | LDPE | black | 1000 |