IP Kontakt
Pl. Zwycięstwa 2E
90-312 Łódź
Poland
tel. +48 42 676 75 25
+48 42 674 22 74
+48 42 674 22 88
e-mail: *ipkontakt@ipkontakt.pl*

FP-319 - LDPE / Soft PVC Feet

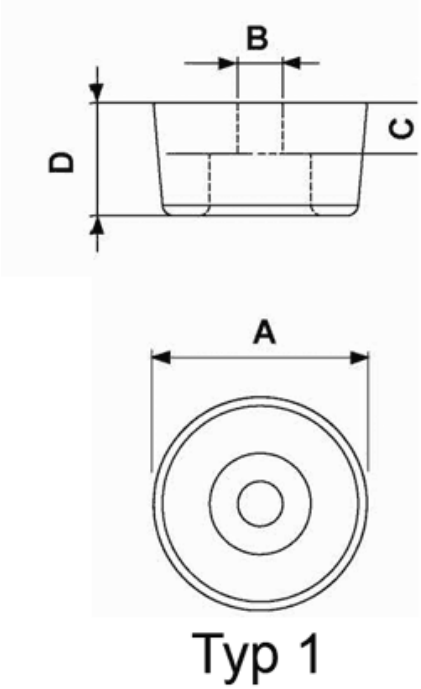

Typ 1

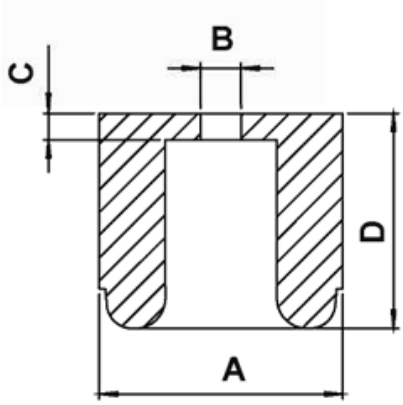

Typ 2



Details:

- **Material: Soft PVC or LDPE**
- **Color: black**

Symbol	Type	Ext. diameter A	B	C	Height D	Material	Color	Standard pack
		[mm]	[mm]	[mm]	[mm]			[szt./pcs]
1016CA01	1	18.5	4	12.5	18	Soft PVC	black	2500