IP Kontakt
Pl. Zwycięstwa 2E
90-312 Łódź
Poland
tel. +48 42 676 75 25
+48 42 674 22 74
+48 42 674 22 88
e-mail: *ipkontakt@ipkontakt.pl*

FP-0902 - PCB tabs

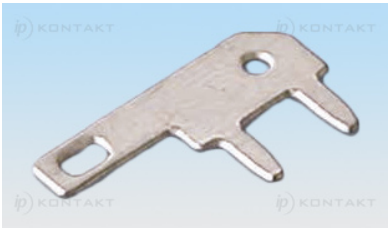

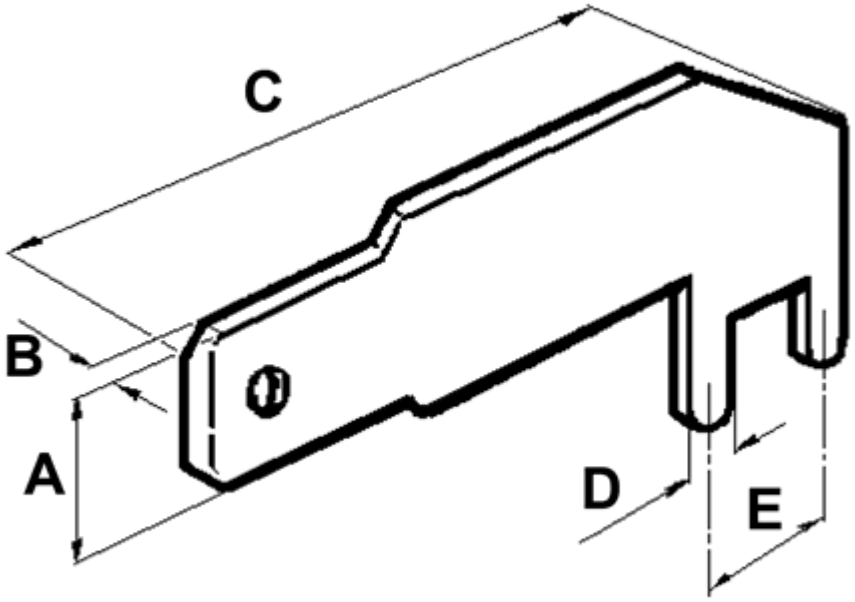

Details:

- **Material: tin-plated brass**
- **Standard pack: 5000 pcs**

Symbol	A	B	C	D	E	Material
	[mm]	[mm]	[mm]	[mm]	[mm]	
0902MA91	2.8	0.5	15.2	1.3	5	brass, tin plated