IP Kontakt
Pl. Zwycięstwa 2E
90-312 Łódź
Poland
tel. +48 42 676 75 25
+48 42 674 22 74
+48 42 674 22 88
e-mail: *ipkontakt@ipkontakt.pl*

FP-0486 - Screw grommets

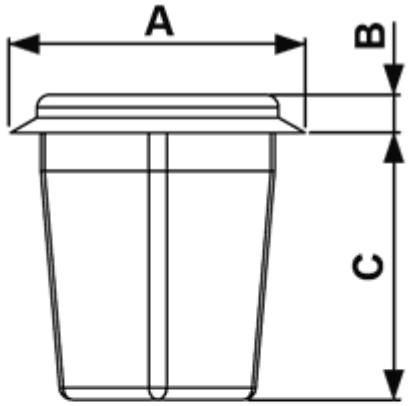

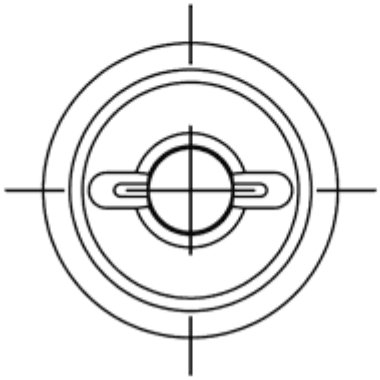

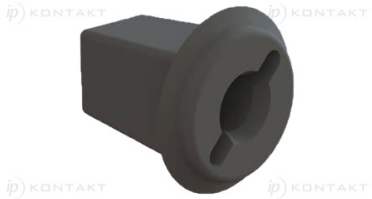

Details:

- **Material: Nylon 6.6**
- **Flammabilty: UL94V2**
- **Color: natural or black**
- Working temperature: -35°C do +85°C

Symbol	ØA	B	C	Mounting hole dimentions	Panel thickness range	Notes	Material	Flammability	Color	Standard pack
	[mm]	[mm]	[mm]	[mm]	[mm]					[szt./pcs]
0486AA00	11.5	1.3	10.5	7.0 x 7.0	0.5 - 1.0	ST40 - ST42	PA 66	UL94 V-2	natural	2500