IP Kontakt
Pl. Zwycięstwa 2E
90-312 Łódź
Poland
tel. +48 42 676 75 25
+48 42 674 22 74
+48 42 674 22 88
e-mail: *ipkontakt@ipkontakt.pl*

FP-0420 - Push-in feet

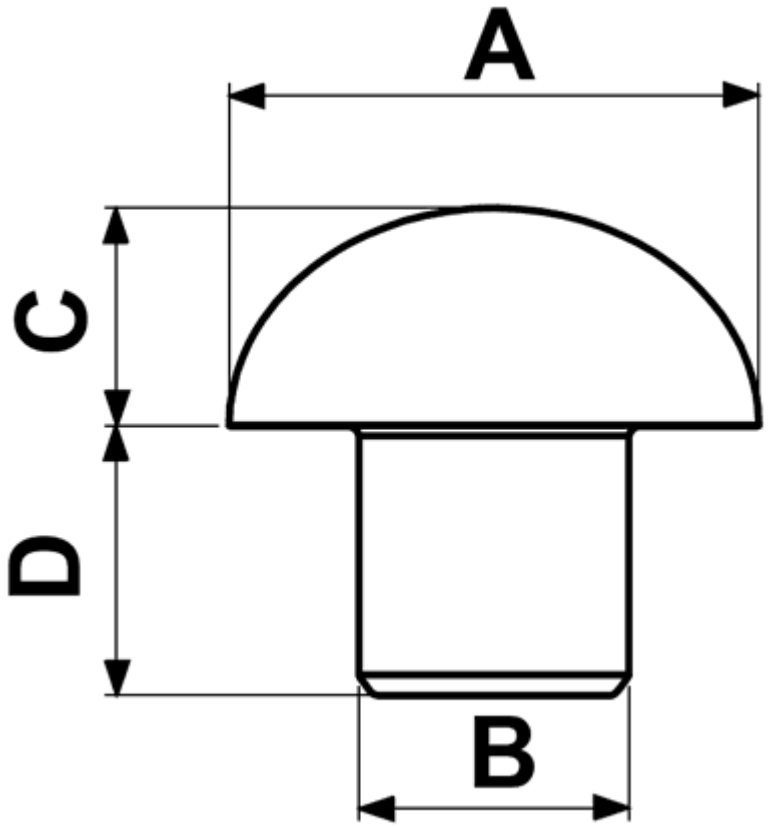



Details:

- **Material: Soft PVC or LDPE**
- **Color: black**
- Working temperature (PVC): -25°C to +60°C
- Working temperature (LDPE): -30°C to +60°C

Symbol	Ext. diameter ØA	ØB	C	D	Material	Color	Standard pack
	[mm]	[mm]	[mm]	[mm]			[szt./pcs]
0422EA01	14	6	6.5	15	LDPE	black	2500