**IP Kontakt**
Pl. Zwycięstwa 2E
90-312 Łódź
Poland
tel. +48 42 676 75 25
+48 42 674 22 74
+48 42 674 22 88
e-mail: *ipkontakt@ipkontakt.pl*

# FP-0108 - Screw grommets

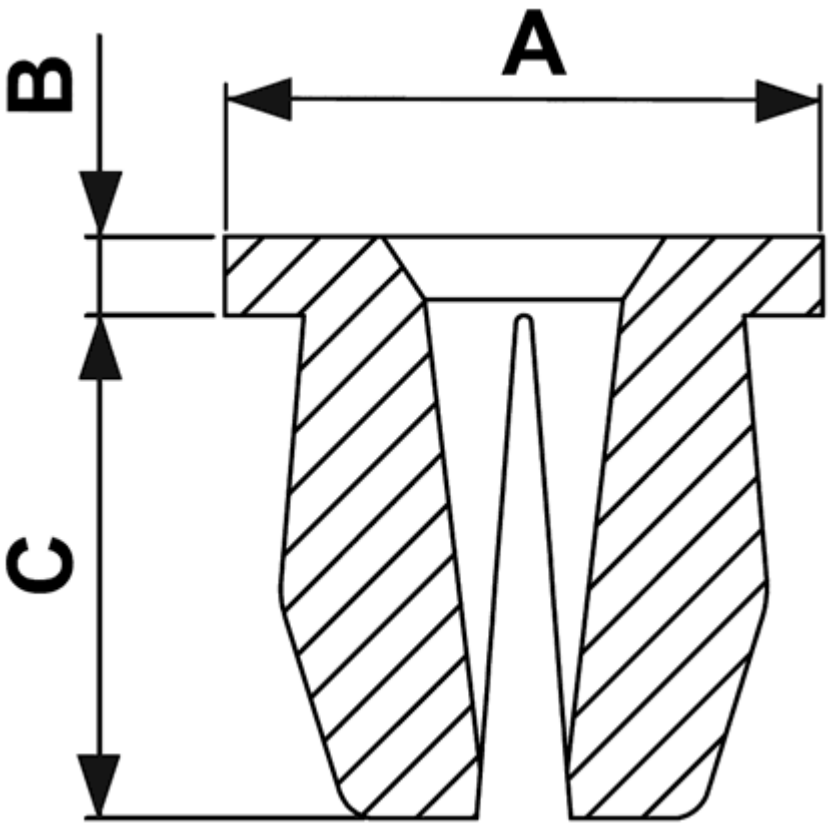




Details:

- **Material: Nylon 6.6**
- **Flammabilty: UL94V2**
- **Color: natural**
- Working temperature: -35°C do +85°C

| Symbol | ØA | B | C | Mounting hole dimentions | Panel thickness range | Notes | Material | Flammability | Color | Standard pack |
|---|---|---|---|---|---|---|---|---|---|---|
| | [mm] | [mm] | [mm] | [mm] | [mm] | | | | | [szt./pcs] |
| 0108AA00 | 8.5 | 1.2 | 5.5 | 4.5 x 4.5 | 0.8 - 2.5 | ST 3.9 | PA 66 | UL94 V-2 | natural | 2500 |