**IP Kontakt**
Pl. Zwycięstwa 2E
90-312 Łódź
Poland
tel. +48 42 676 75 25
+48 42 674 22 74
+48 42 674 22 88
e-mail: *ipkontakt@ipkontakt.pl*

# RKWFA-16-300 - Kwik Wrap on Adhesive Hook & Loop



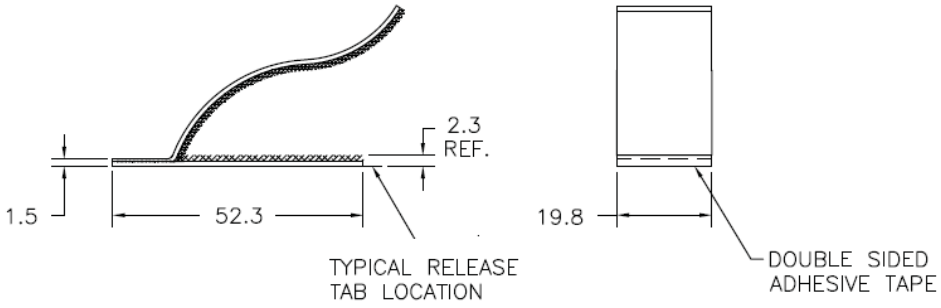


Details:

- **Material: LDPE Hook, RMS-249***
- **Nylon Knit Loop, RMS-251***
- **Color: Black**
- **Acrylic Adhesive, RMS-113***
- **Standard Pack: 100/Bag**

| Symbol | Max. cable bundle diameter [mm] | Color |
|---|---|---|
| RKWFA-16-300 | 19.05 | black |