IP Kontakt
Pl. Zwycięstwa 2E
90-312 Łódź
Poland
tel. +48 42 676 75 25
+48 42 674 22 74
+48 42 674 22 88
e-mail: *ipkontakt@ipkontakt.pl*

O-KNU - Knurled Nuts

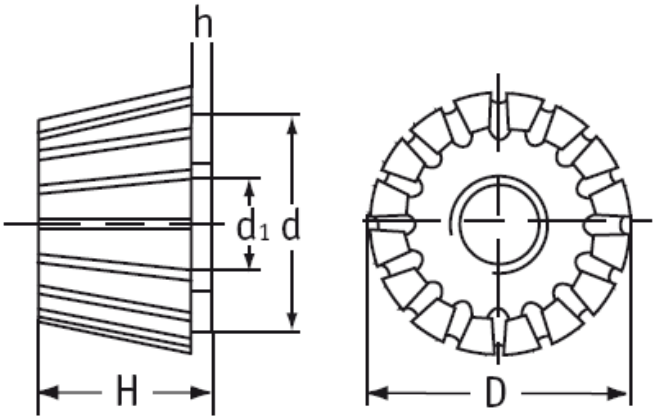

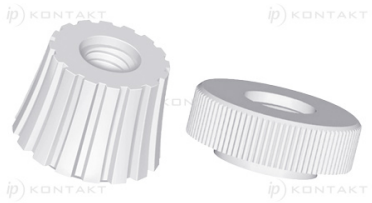

Typ 1

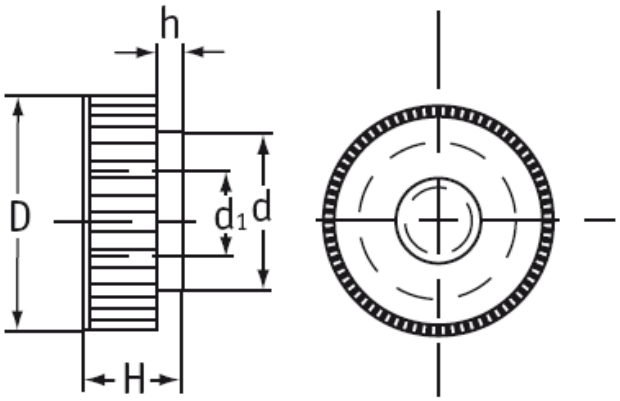

Typ 2

Details:

- **Material: Nylon 6.6**
- **Color: Natural**
- Typ 1: conical
- Typ 2: standard
- Standard pack: 1000 pcs

Symbol	Type	Thread d	D	d_1	Height H	h	Material	Color
			[mm]	[mm]	[mm]	[mm]		
O-KNU-1-M4	1	M4	16	14	12	1	PA 66	natural
O-KNU-1-M5	1	M5	16	14	12	1	PA 66	natural
O-KNU-1-M6	1	M6	16	14	12	1	PA 66	natural
O-KNU-1-M8	1	M8	16	14	12	1	PA 66	natural
O-KNU-2-M3-16-35	2	M3	16	10	8	3.5	PA 66	natural
O-KNU-2-M4-16-35	2	M4	16	10	8	3.5	PA 66	natural
O-KNU-2-M5-16-35	2	M5	16	10	8	3.5	PA 66	natural
O-KNU-2-M6-16-35	2	M6	16	10	8	3.5	PA 66	natural
O-KNU-2-M4-16-14	2	M4	16	10	6	1.4	PA 66	natural
O-KNU-2-M5-16-14	2	M5	16	10	6	1.4	PA 66	natural
O-KNU-2-M6-16-14	2	M6	16	10	6	1.4	PA 66	natural
O-KNU-2-M4-20-35	2	M4	20	10	8	3.5	PA 66	natural

Symbol	Type	Thread d	D	d_1	Height H	h	Material	Color
			[mm]	[mm]	[mm]	[mm]		
O-KNU-2-M5-20-35	2	M5	20	10	8	3.5	PA 66	natural
O-KNU-2-M6-20-35	2	M6	20	10	8	3.5	PA 66	natural
O-KNU-2-M8-20-35	2	M8	20	10	8	3.5	PA 66	natural