IP Kontakt
Pl. Zwycięstwa 2E
90-312 Łódź
Poland
tel. +48 42 676 75 25
+48 42 674 22 74
+48 42 674 22 88
e-mail: *ipkontakt@ipkontakt.pl*

FP-11336SI11 - Rubber feet with carbon base



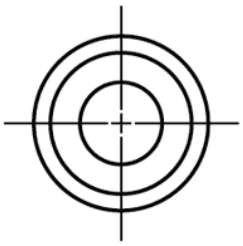

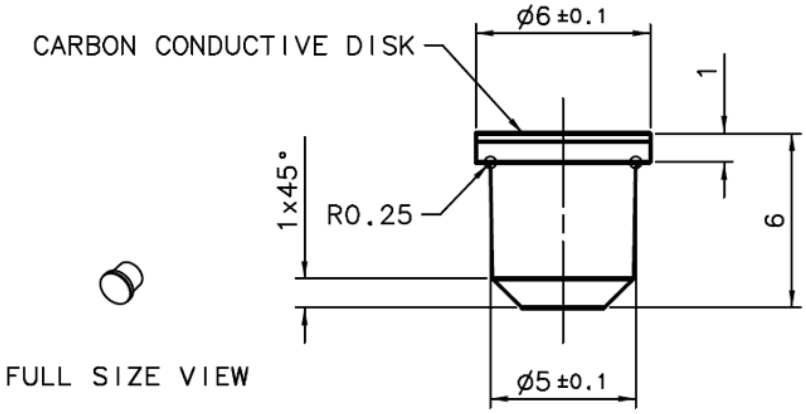

Details:

- Material: Silicone Rubber 60 Shore A
- Carbon base, conductive
- Colour: natural
- Standard pack: 100 szt.

Symbol	Ext. diameter ±0.1 [mm]	Material	Shore A hardness	Color
FP-11336SI11	6	silicone rubber	60	natural