IP Kontakt
Pl. Zwycięstwa 2E
90-312 Łódź
Poland
tel. +48 42 676 75 25
+48 42 674 22 74
+48 42 674 22 88
e-mail: *ipkontakt@ipkontakt.pl*

F-OK-5010 - Edge Grommets

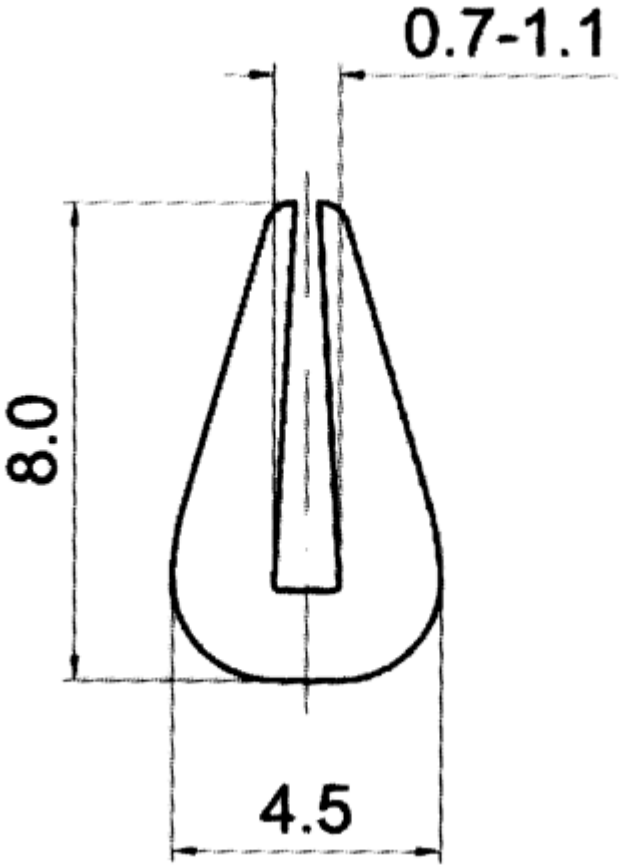



Details:

- **Material: PVC**
- **Colour: see table**
- Standard pack: 50 m roll

Symbol	Panel thickness ±0.1	Steel clamp	Material	Color	Standard pack
	[mm]				[m]
F-OK-5010-BLK	1	no	PVC	black	50
F-OK-5010-WH	1	no	PVC	white	50
F-OK-5010-RED	1	no	PVC	red	50
F-OK-5010-GR	1	no	PVC	grey	50
F-OK-5010-CL	1	no	PVC	transparent	50
F-OK-5010-BLU	1	no	PVC	blue	50
F-OK-5010-GRE	1	no	PVC	green	50