IP Kontakt
Pl. Zwycięstwa 2E
90-312 Łódź
Poland
tel. +48 42 676 75 25
+48 42 674 22 74
+48 42 674 22 88
e-mail: *ipkontakt@ipkontakt.pl*

BL-NRAD3 - Knurled thumb nuts

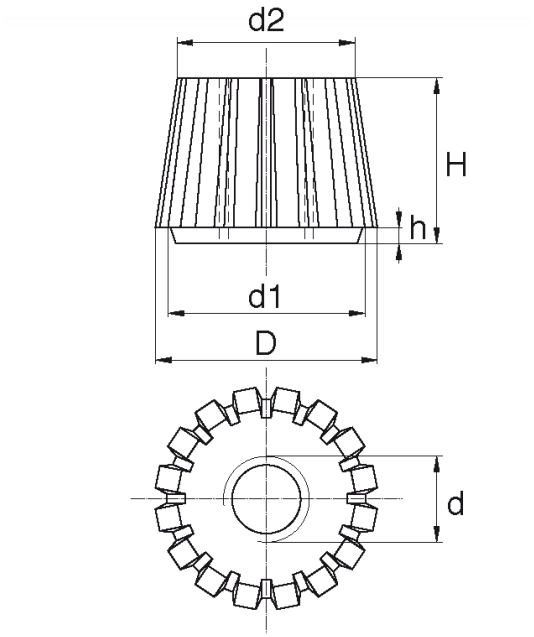



Details:

- **Material: Nylon**
- **Colour: natural**
- Colours available on special order: black, white, grey, red
- Standard pack: 1000 pcs

Symbol	Thread d	d1	d2	Ext. diameter D	h	Height H	Material	Color
		[mm]	[mm]	[mm]	[mm]	[mm]		
BL-NRAD3-M4	M4	14	13	16	1	12	PA	natural
BL-NRAD3-M5	M5	14	13	16	1	12	PA	natural
BL-NRAD3-M6	M6	14	13	16	1	12	PA	natural