IP Kontakt
Pl. Zwycięstwa 2E
90-312 Łódź
Polska

tel. +48 42 676 75 25
+48 42 674 22 74
fax: +48 42 676 49 25
e-mail: *ipkontakt@ipkontakt.pl*

BL-POK258 - Wing grips

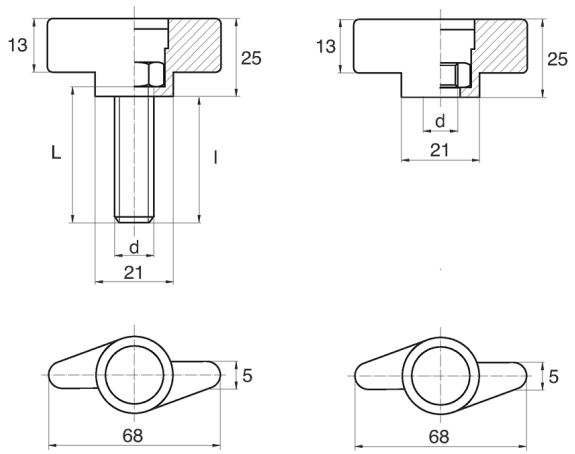

Details:

- **Handle material: Nylon**
- **Handle colour: black**; other colours available on special order
- Thread material: see table; For type M stainless steel, brass and aluminium available on special order
- Type:
  - F - female
  - M - male

Part No.	Type	Thread d	Thread material	L	l ±1mm	Standard pack
				[mm]		[pcs]
BL-POK258M-M10-45	M	M10	zinc-plated steel	45	40	100