IP Kontakt
Pl. Zwycięstwa 2E
90-312 Łódź
Polska

tel. +48 42 676 75 25
+48 42 674 22 74
fax: +48 42 676 49 25
e-mail: *ipkontakt@ipkontakt.pl*

O-UC - Banjo Union Caps

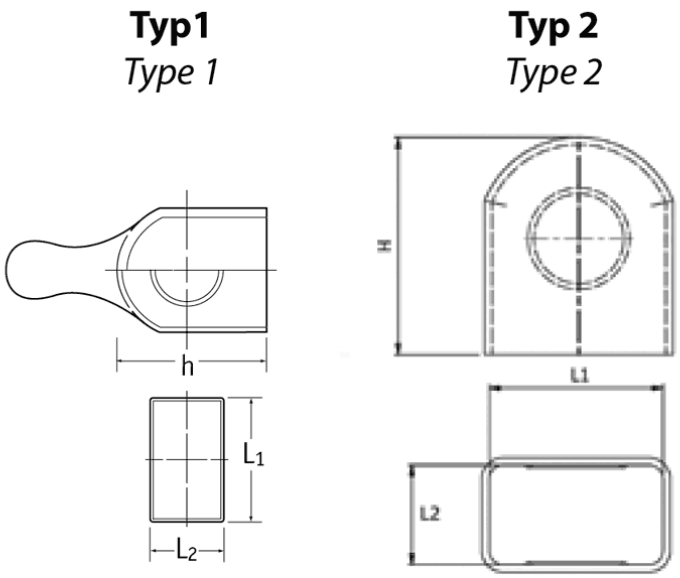

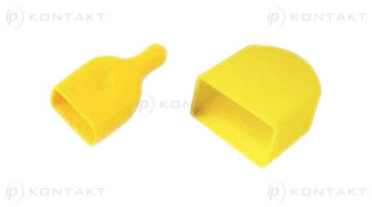

Details:

- Type 1:
  - **Material: Yellow Flexible PVC**
  - Snug fitting protects against dirt ingress
  - Flexible, for easy fitting
  - Fits hydraulic banjo unions to DIN 7642 B/E
  - Finger tab for quick fitting and removal
- Type 2
  - **Material: Yellow HDPE**
  - Fits hydraulic banjo unions to DIN 7642 B/E
  - Clicks into place for secure fitting
  - Harder material allows quick application

Part No.	Type	Pipe outer diameter	L1	L2	H, h
		[mm]			
O-UC-2-20	2	8	20	11.8	25