IP Kontakt
Pl. Zwycięstwa 2E
90-312 Łódź
Polska

tel. +48 42 676 75 25
+48 42 674 22 74
fax: +48 42 676 49 25
e-mail: *ipkontakt@ipkontakt.pl*

T-NSK - Caps for square fence post

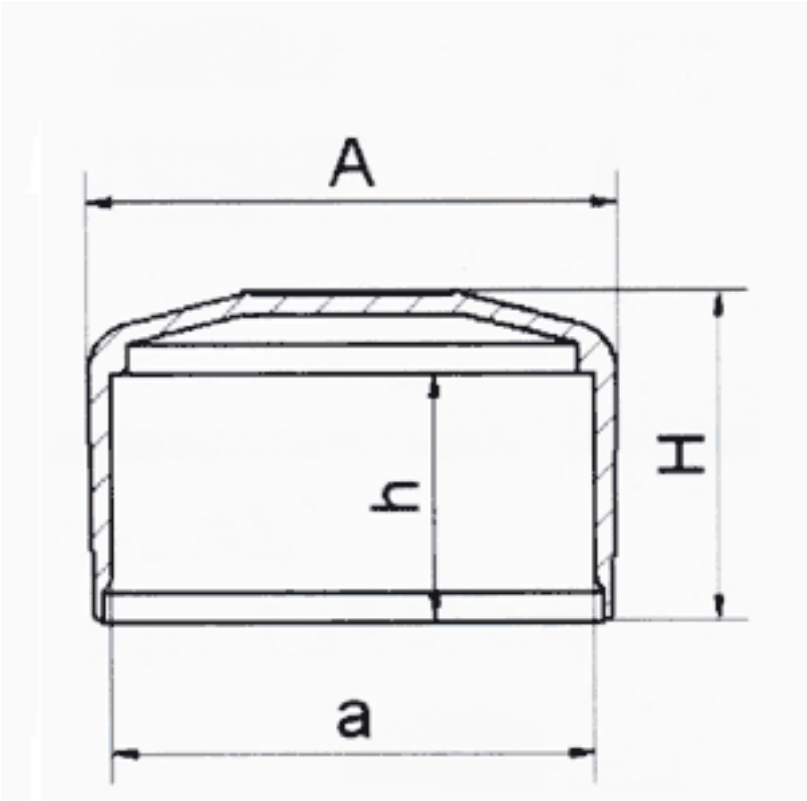

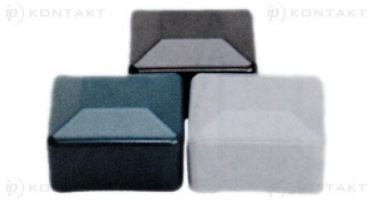

Details:

- **Material: PE**
- **Available colours:**
  - **black (RAL 9005)**
  - **grey (RAL 7040)**
  - **brown (RAL 8028)**
  - **green(RAL 6005)**
  - **anthracite grey (RAL 7016)**

Pat No.	a	A	H	h
	[mm]			
T-NSK-80	80.0	87.0	36.0	26.0